DISPLAYS2GO
CONNECTING PEOPLE & BRANDS WITH THE WORLD

SKUs: EDSIGN63, EDSIGN66, EDSIGN82, EDSIGN8511, EDSIGN1117, EDSIGN58OV, EDSIGN104OV, EDSIGN108OV

Assembly

1. Print your custom design onto the film sheet and test it with the sign holder.

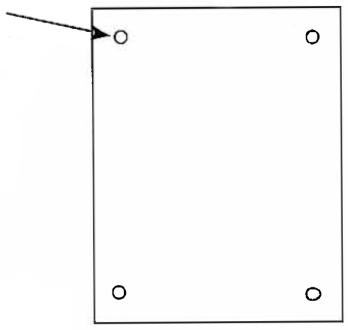

2. Hold one sign plate at the desired location on the wall. Mark the center of each hole.

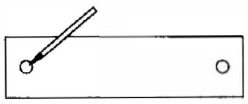

3. Remove the sign frame and drill pilot holes at the marked locations. If your wall is hollow, drill holes to fit the wall anchors.

4. Separate the standoff cap from the barrel. Using the included mounting hardware to secure the standoff barrels to the wall.

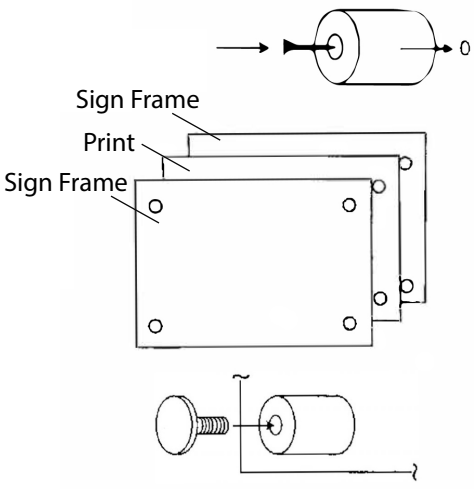

5. Sandwich your printed design between the two sign frame.

6. Place the sign assembly onto the standoffs and hand tighten the caps into the barrels.

CONTACT INFORMATION:
www.displays2go.com
PHONE: 844-221-3388