POST Assembly Instructions

1. Put c-hook into the slotted tube of slot.
2. The ball top of slot aim at the slotted tube (post) of slot, and press down until ball top protruded with both side keyhole lock in.
3. Place slotted tube (post) on underneath both side of the keyhole to revolve until aim at the base of lock lugs to lock in.

A type: Filling sand or stone
W type: Filling sand or water
E type: Filling sand or stone

Notice:
Apply small amount of grease, soap,or liquid dish detergent to bottom of post prior to insertion into base E type.

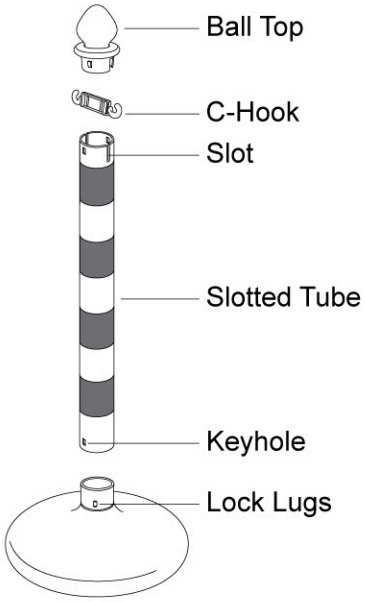

DISASSEMBLE

1. Rotate CCW.
2. Pull out up.

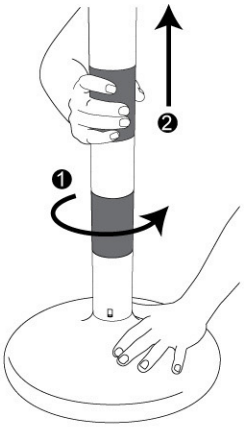

Base Type

Assembly Instructions For Deluxe Ground Post
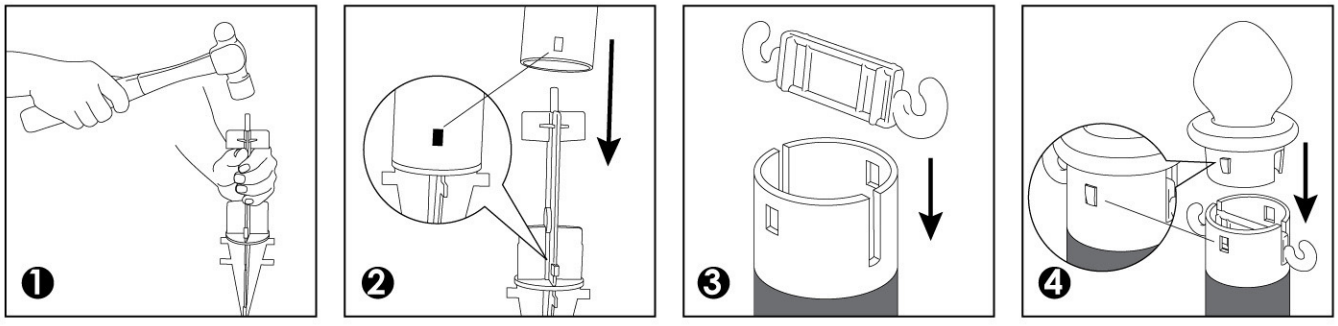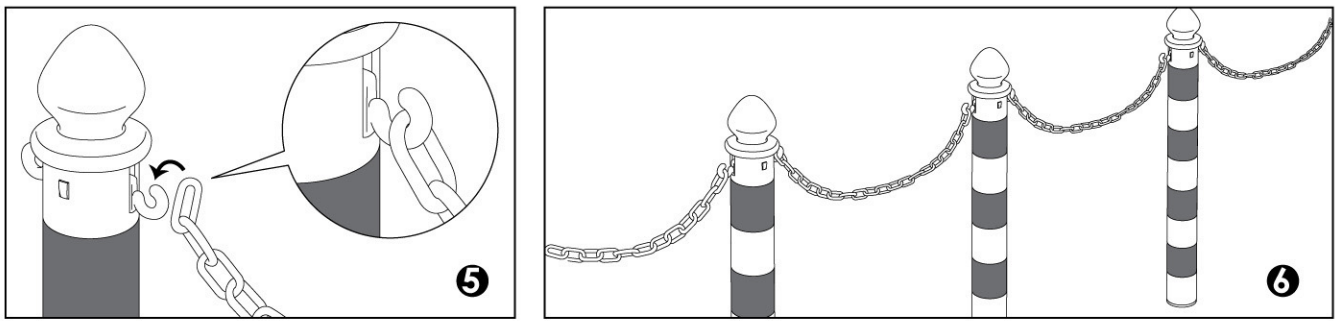
Steel Reinforced Plastic