Bleed Line:
Art emements must extend to this line to account for slight inaccuracies when trimming

Stitch Line:
Any text/logos/images going through this line will have stitch lines through it.

Trim Line:
Any text/logos/images past this line will be trimmed off.
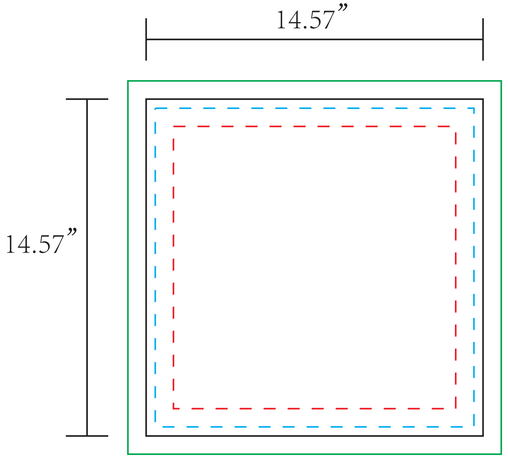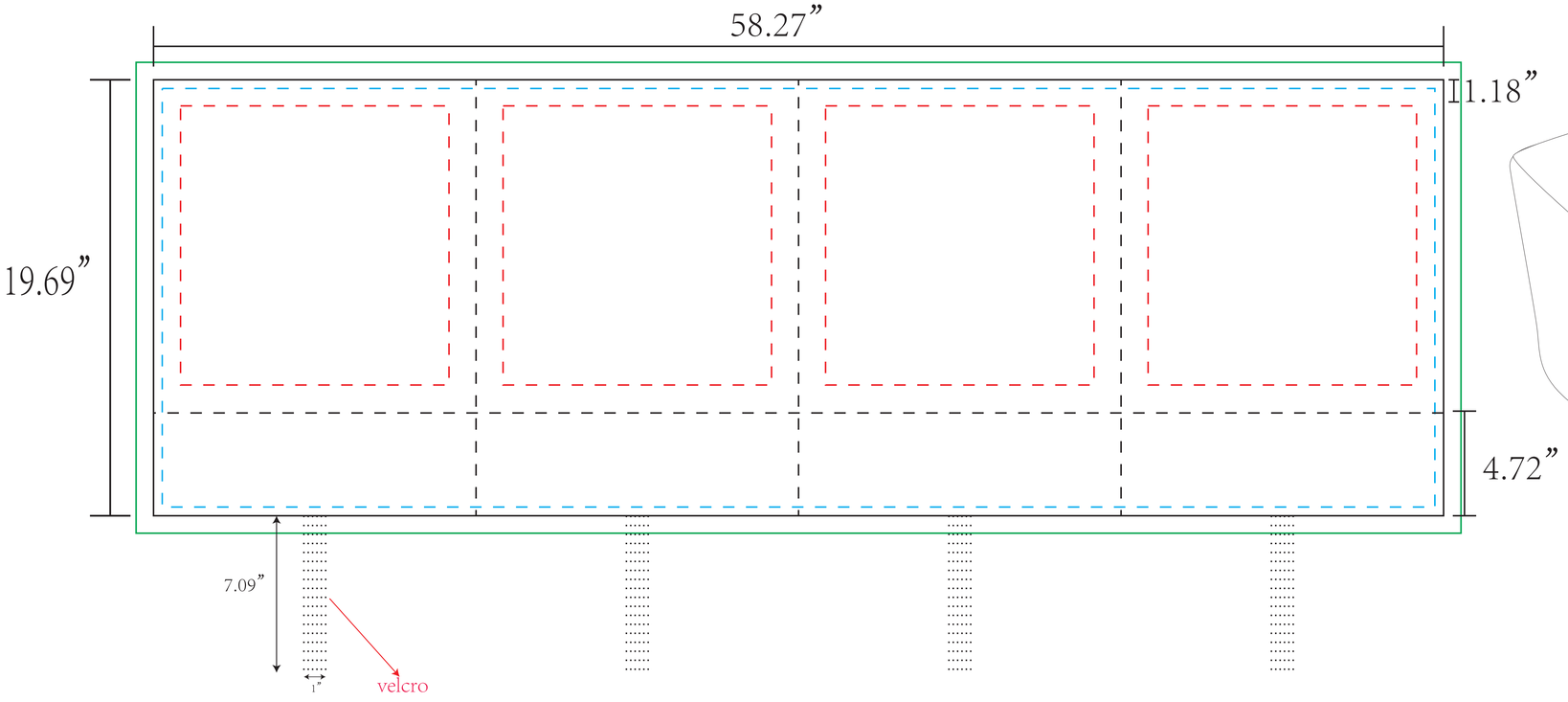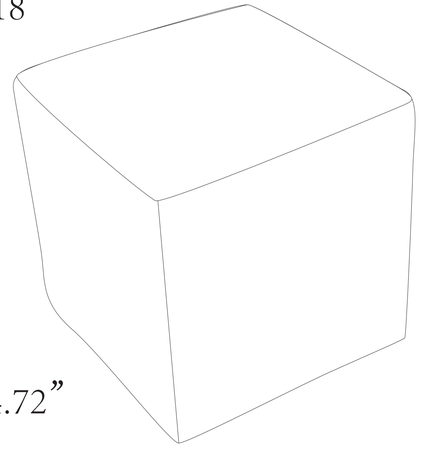
Safety Line:
Important text/logos should not extend past this line.