# Assembling Instruction of TBAESLF49

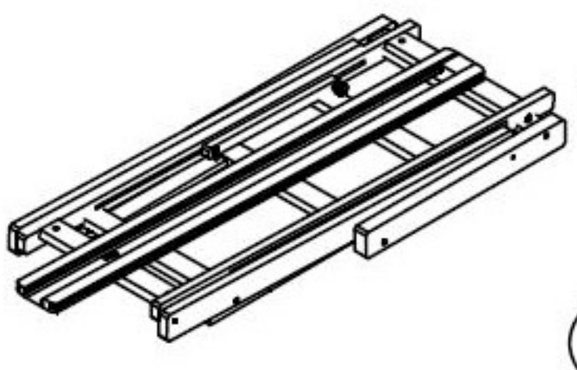

① *1PC

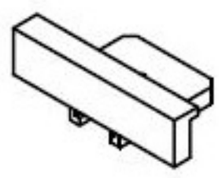

② *1PC

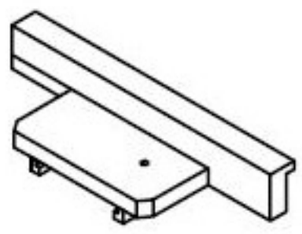

③ *1PC

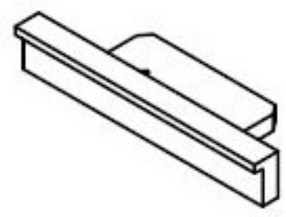

④ *1PC

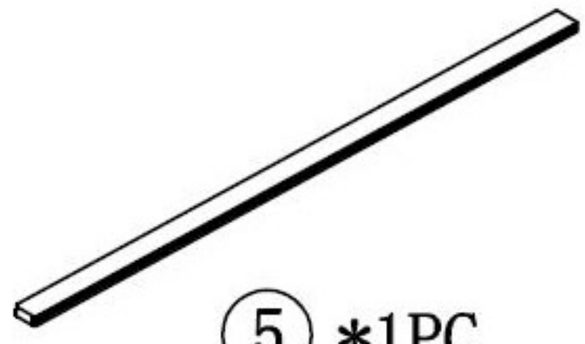

⑤ *1PC

## SPARE LIST

A*4

①

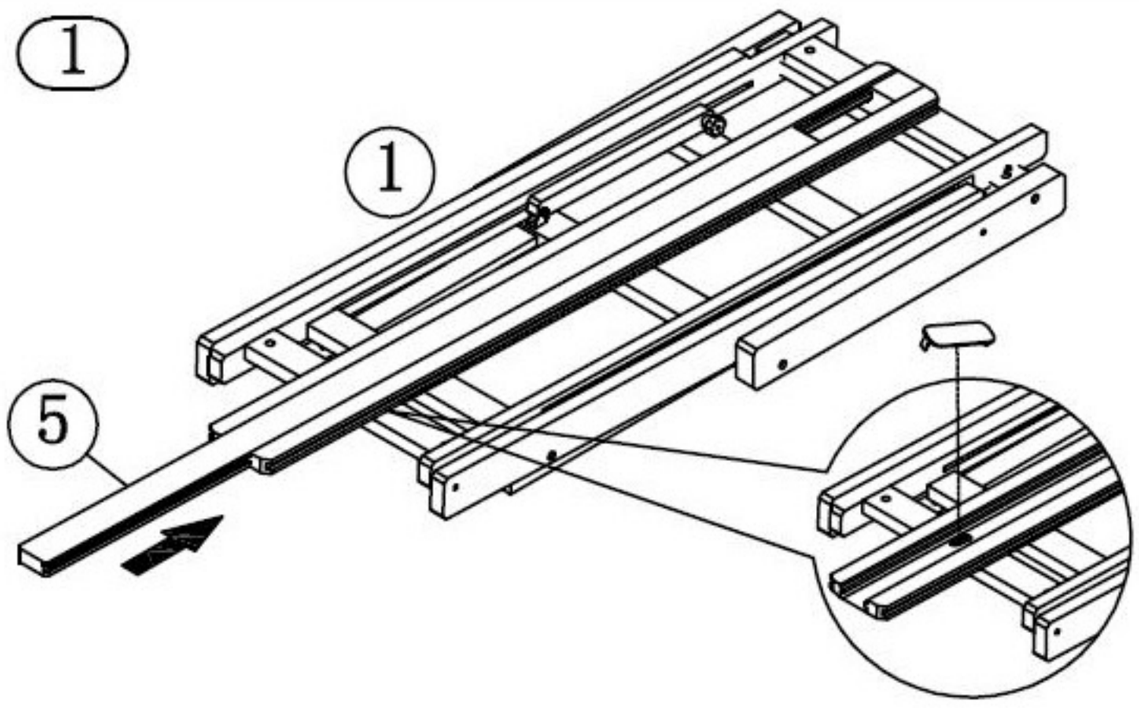


②

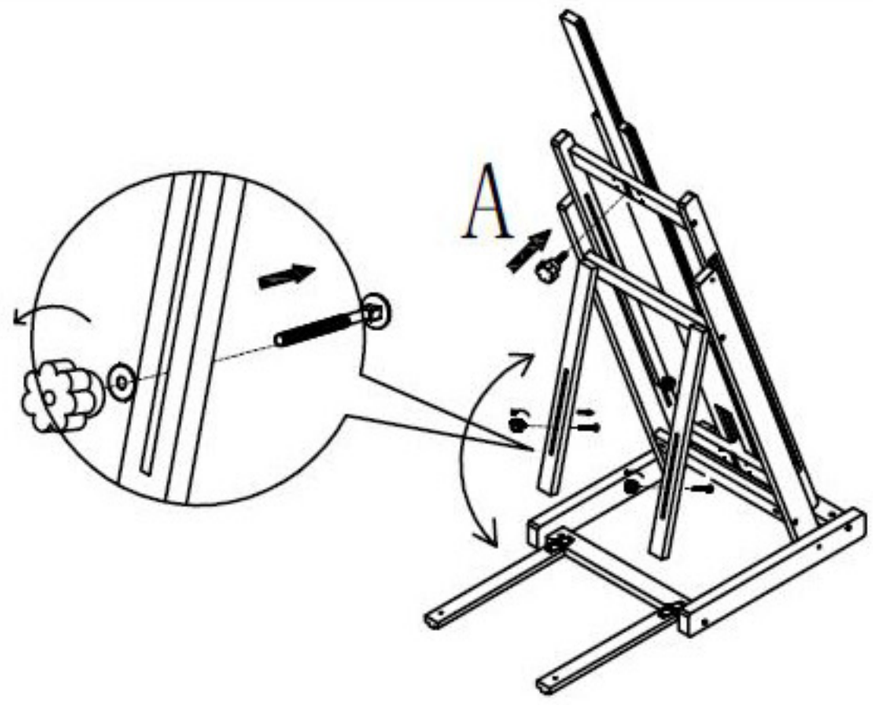


③

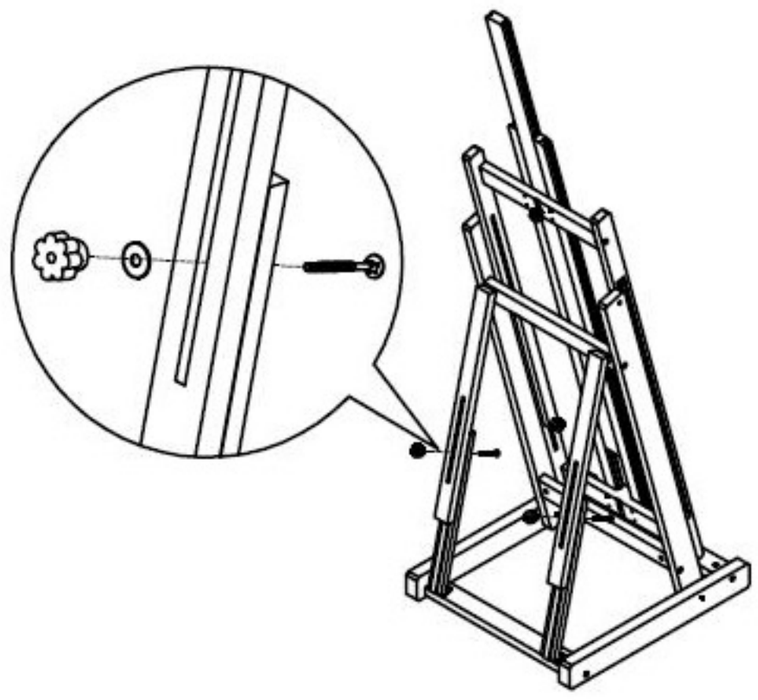

④

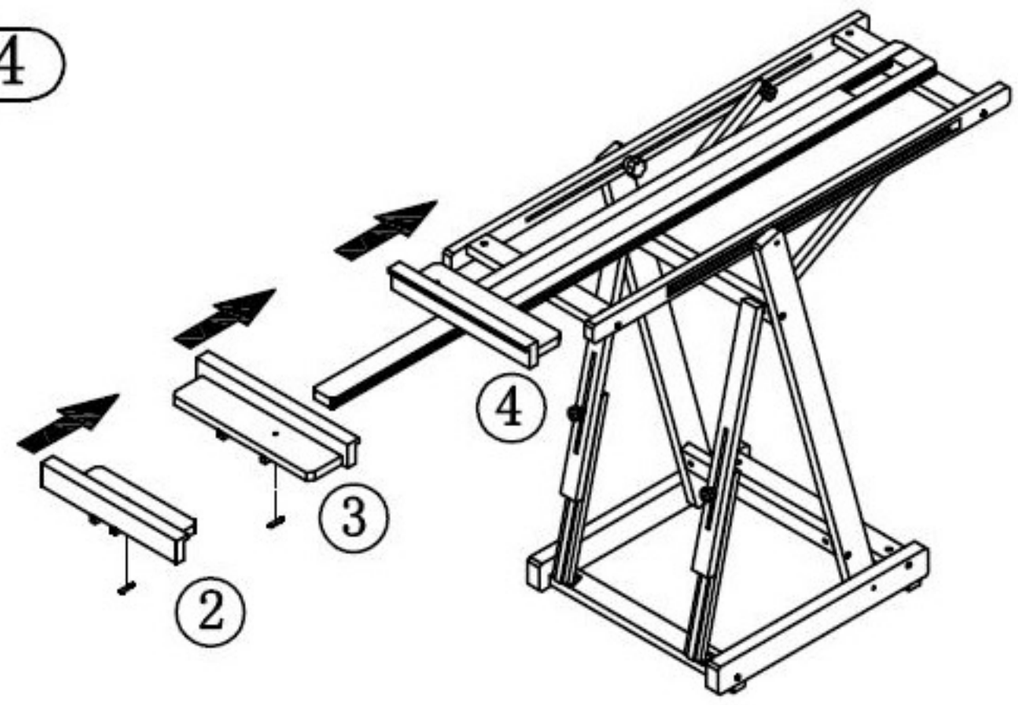


⑤

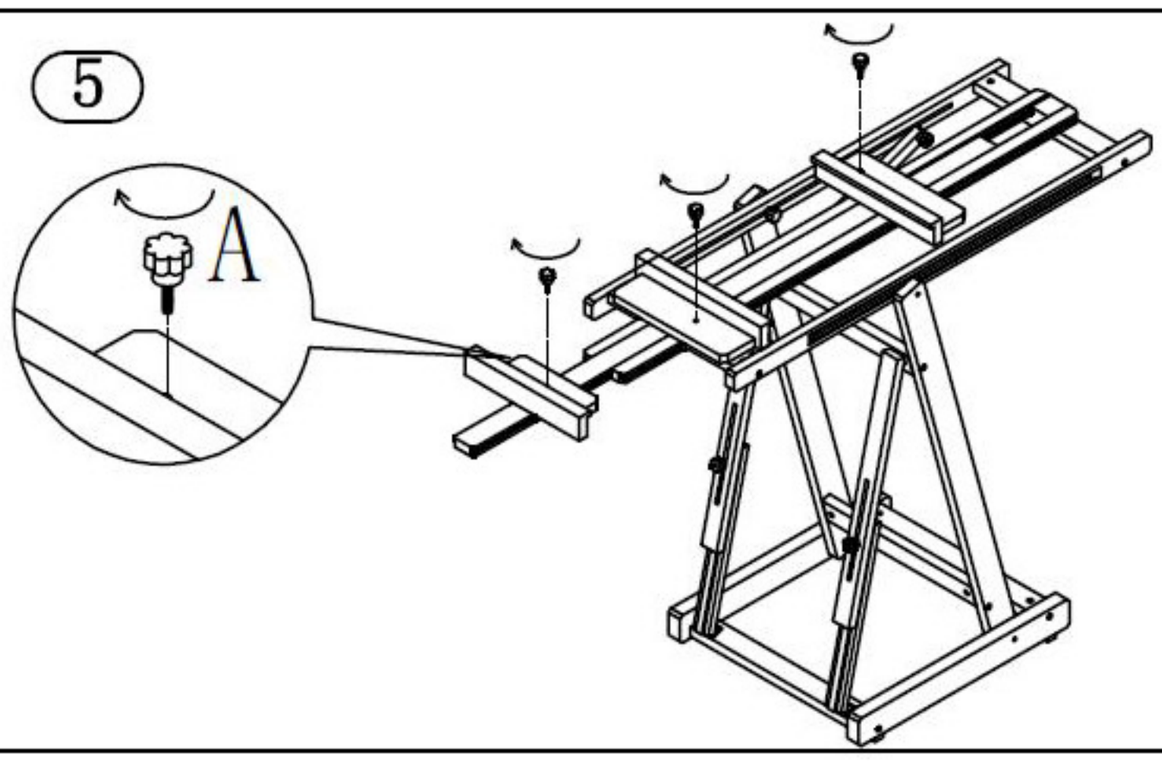

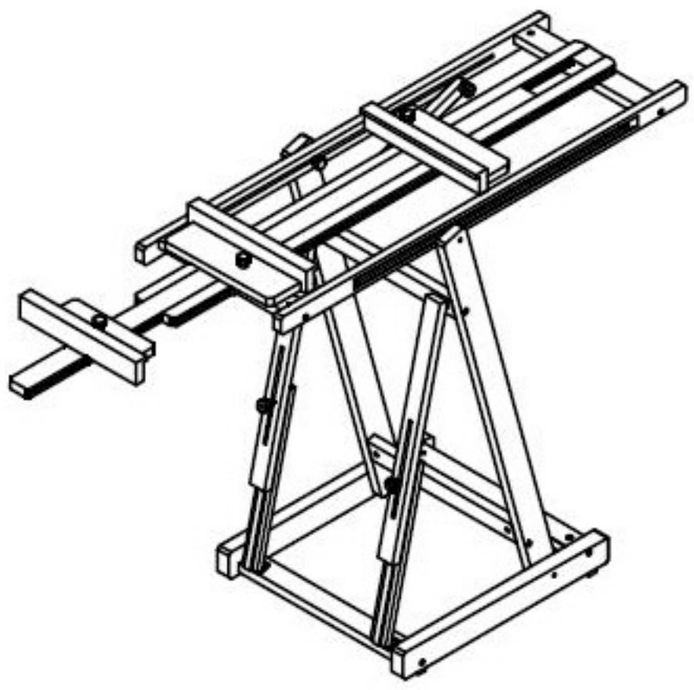
⑥