ASSEMBLY INSTRUCTIONS

DISPLAYS2GO
CONNECTING PEOPLE & BRANDS WITH THE WORLD

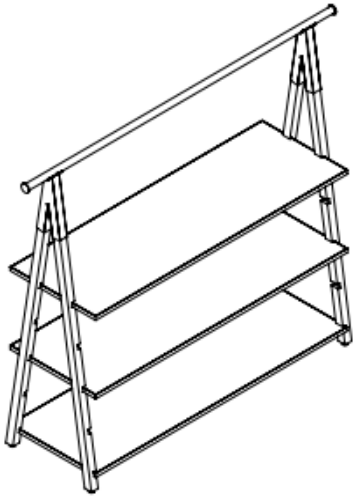

Wooden A-Frame Clothing Rack with Base Shelves

SKU: PPLNTPSW2NAT, PPLNTPSW2BRN

1

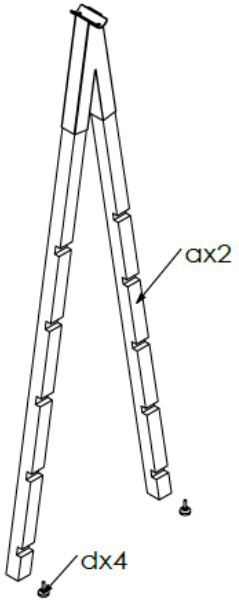

2

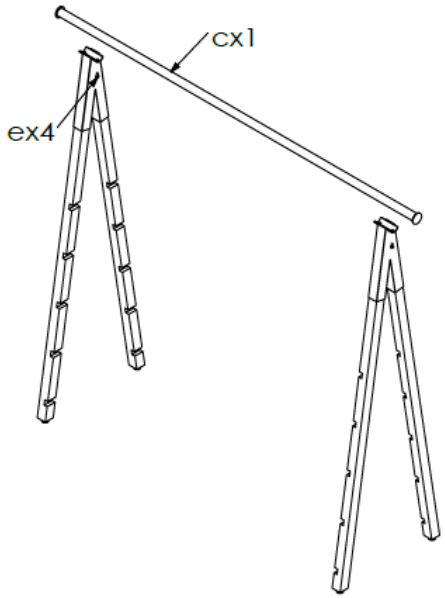

PARTS LIST

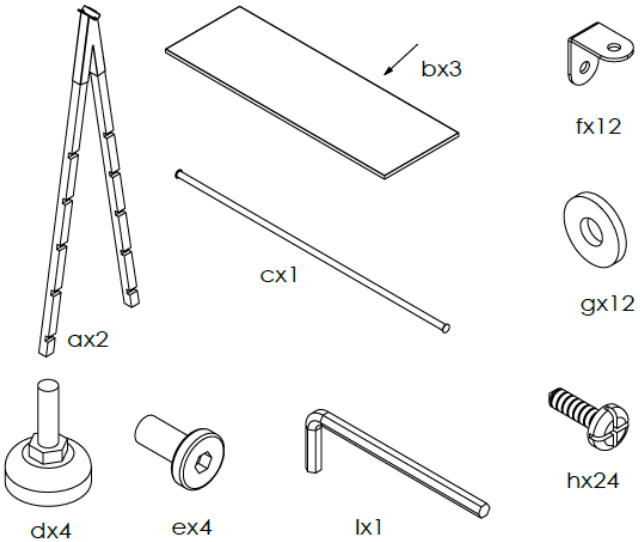

3

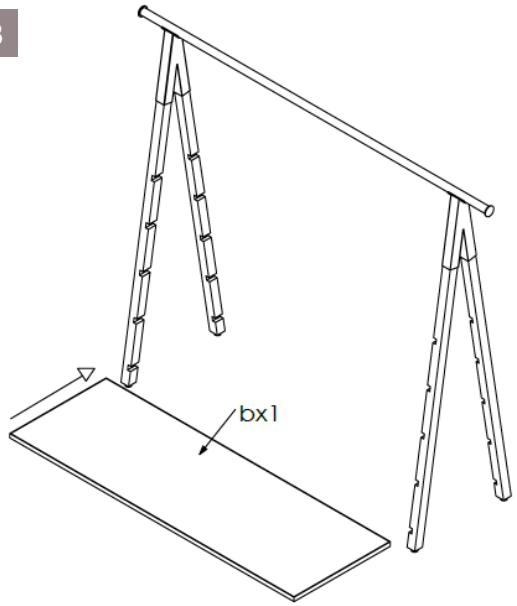

4

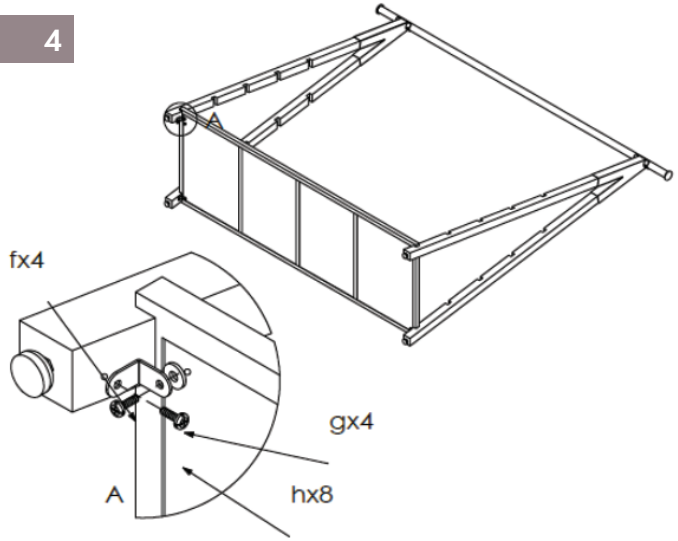

Secure shelf on all 4 corners with screws, brackets, and washers.

If you have any questions regarding our products, please visit us at www.displays2go.com
or contact Displays2go customer service at 844-221-3388.

DISPLAYS2GO
CONNECTING PEOPLE & BRANDS WITH THE WORLD

5

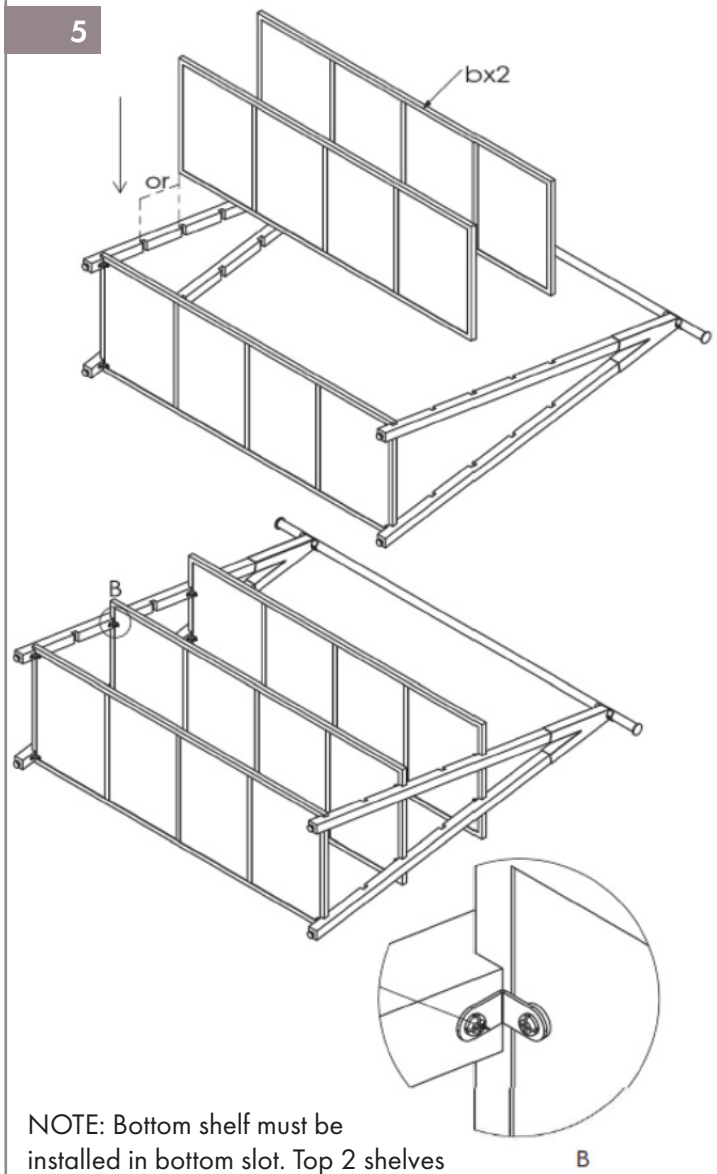

NOTE: Bottom shelf must be installed in bottom slot. Top 2 shelves can be adjusted as needed.

6

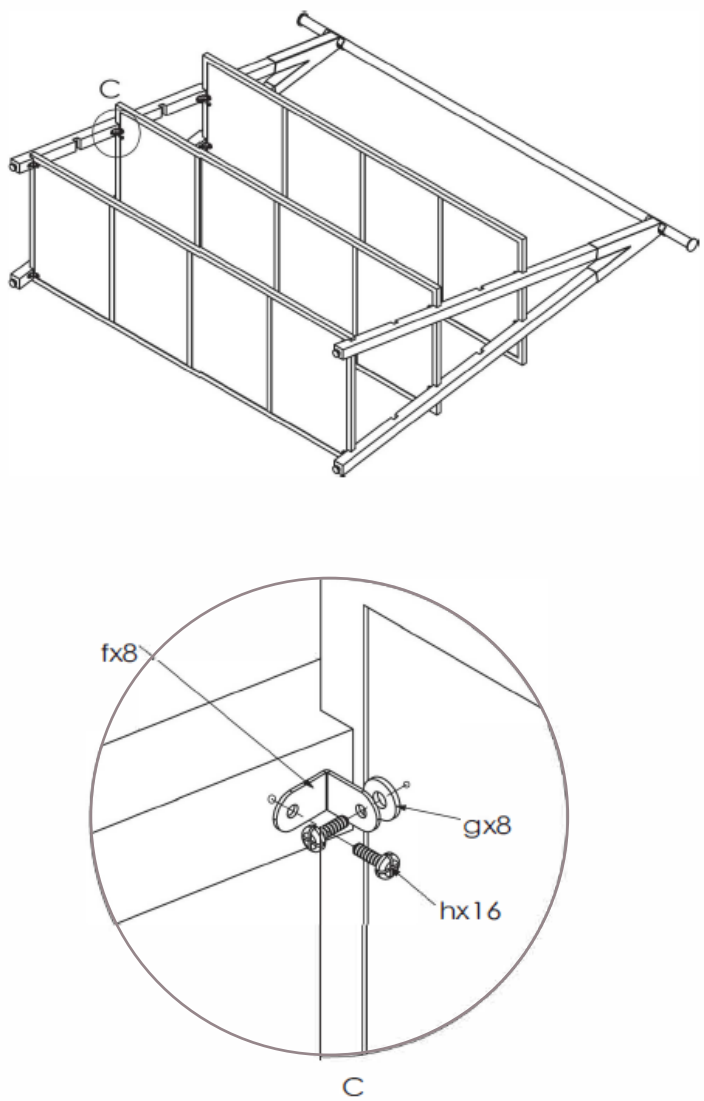

Assembly is complete.

Scan the QR code to visit the product page.