Dispenser Usage:

Wash all parts before first use. Assemble dispenser per diagram on opposite page. Be sure the faucet handle is in the "closed" position, next fill the dispenser with beverage and replace lid.

Dispenser Cleaning:

Although this dispenser is dishwasher safe, we recommend hand washing whenever possible. Hand washing will extend the life of your dispenser and reduce water spotting. Clean exterior of dispenser with a soft damp cloth to remove water spots. Never use harsh cleaners, citrus based cleaners, abrasives or solvents on your dispenser.

Precautions:

- Only transport dispenser when empty.
- Keep away from children.
- Do not overfill Dispenser.
- Do not use dispenser if damaged or cracked.
- Never place dispenser near edge of a counter or table.
- Clean faucet frequently.

Dispenser Assembly Instructions:

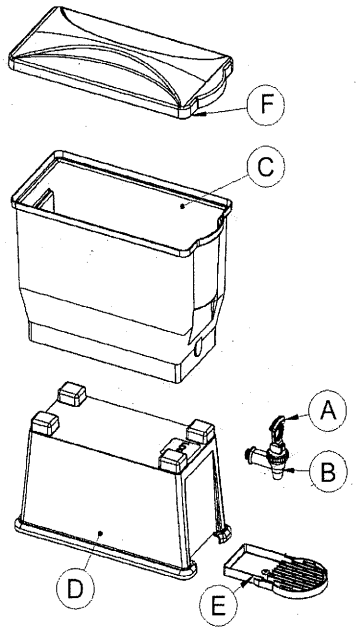

Attach faucet (A & B) to container (C).

Place container (C) on base (D).

Attach drip tray (E) to base (D).

Place lid (F) onto Dispenser container (C).

Your dispenser is now ready for use.