Truss Mounting Bracket Instructions

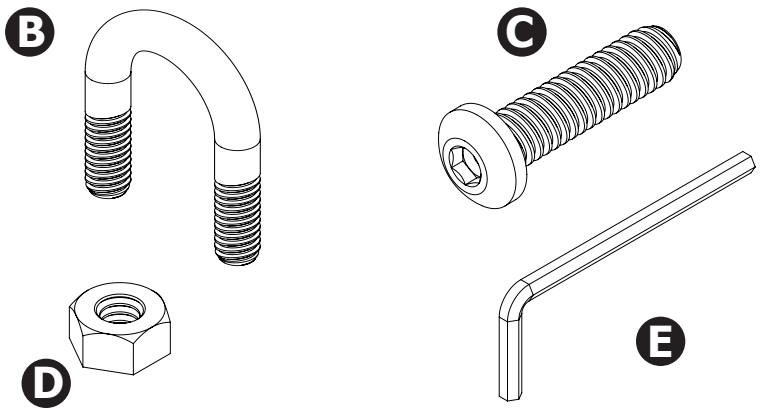

Parts

	Description	QTY
A.	Bracket Mounting Plate	1
B.	U-Bolts	2
C.	1/4-20 Socket Head Bolts	2
D.	1/4-20 Hex Nuts	6
E.	5/32 Hex Key	1
F.	Truss Section	*
G.	ADP 135 Tablet Mount	*

* Items Sold or Included Separately

1

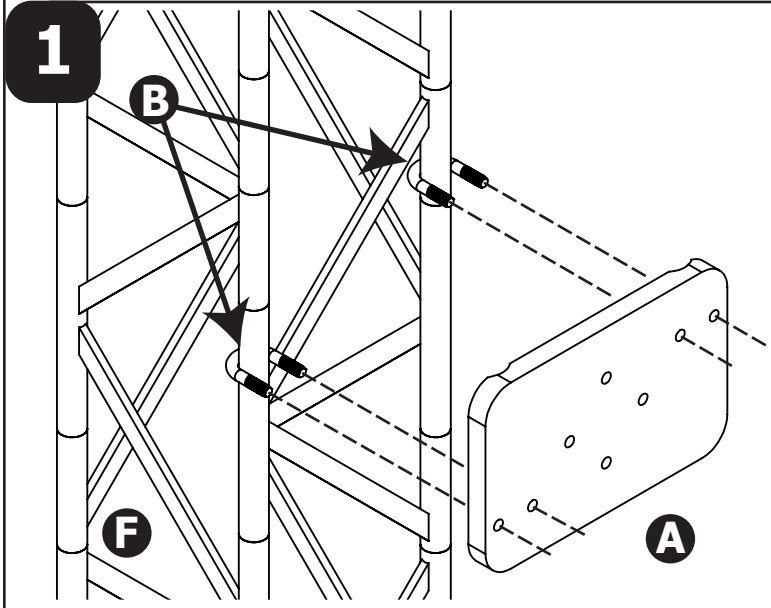

Line up the bracket mounting plate with the desired location on the truss. Loop the U-bolts around the truss supports and feed through the holes in the plate.

2

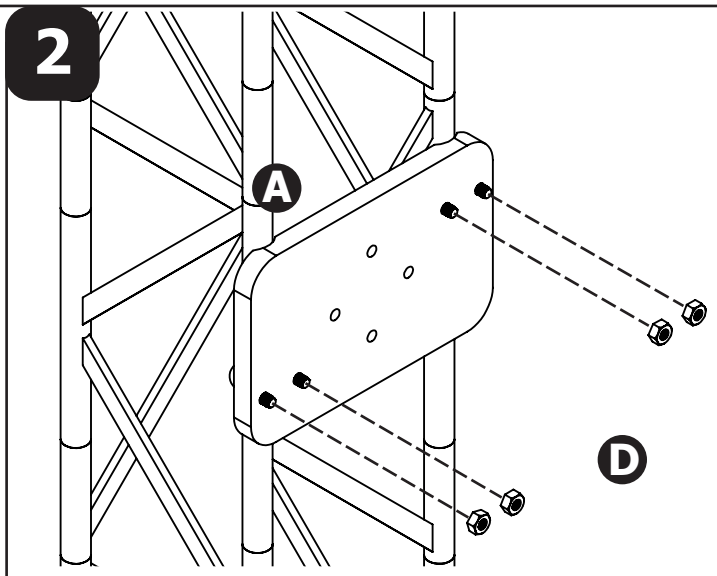

Finger tighten the hex nuts to the tips of the U-bolts. Use a wrench to tighten the hex nuts at least another 1.5 full rotations afterward. The plate may bend slightly—this is normal.

3

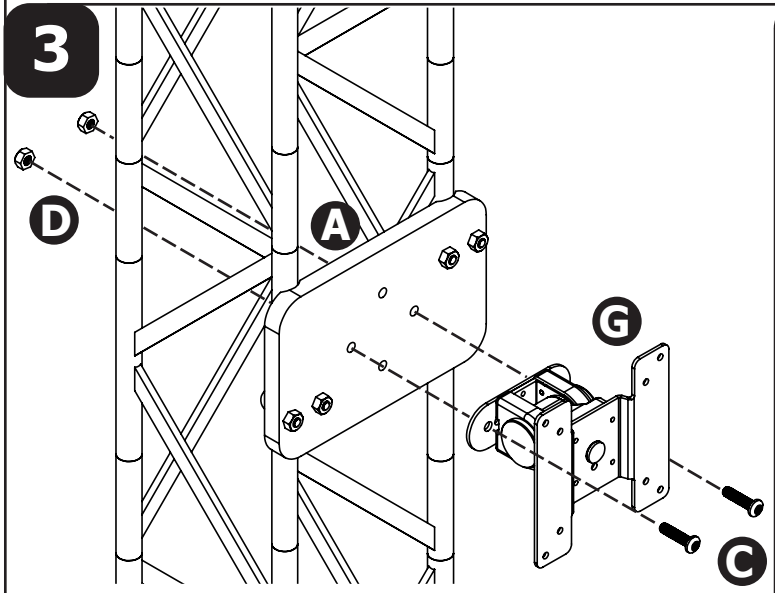

Place the socket head bolts through the holes shown and secure with hex nuts. For easiest tightening, hold the nuts with a wrench and tighten the bolts using the supplied hex key.

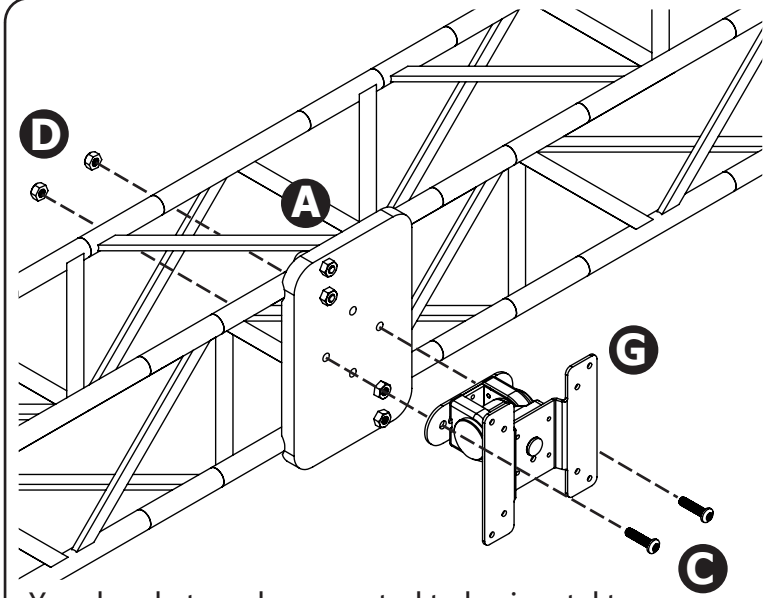

Your bracket can be mounted to horizontal truss sections, as shown above, in addition to the vertical truss sections shown in the previous panels. For this, repeat step 3 while mounting to the holes shown.